rothoengineer®

Data sheet post base Type S40

Name of the manufacturer: Rotho Blaas srl - Via dell'Adige 2/1 - 39040 Cortaccia (BZ) Italy
Number of the European Technical Approva ETA 10/0422
Number of the ETA Guideline: ETAG 015
Name of product: S40_1, S40_2

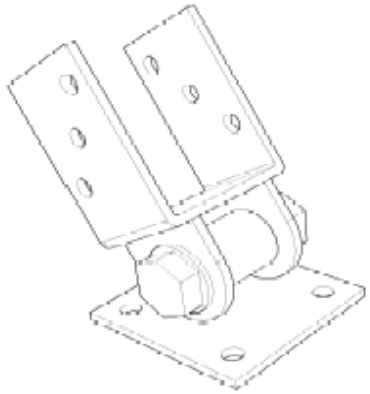

Product details and definitions

Post base		Metal Fasteners	Distances [mm]		
Type	Dimension	Type	max. a	$e_{F2/F3}$	$e_{F4/F5}$
S40_1	71x60	5x HBS+ 8x60mm	-	86	-
S40_2	91x60	5x HBS+ 8x60mm	-	86	-

Definition of forces, their direction and eccentricity

Force F_1 tensile or compression load
Force F_2 horizontal load parallel to the side plates of post base
Force F_4 horizontal load perpendicular to the side plates of post base

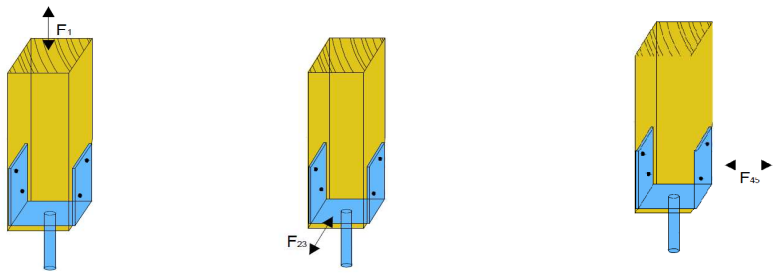

Acting forces

F_1 axial force (tension or compression) acting along the central axis of the joint
F_2 and F_3 horizontal force parallel to the side plates of the post base acting with the lever arm $e_{F2/F3}$ above the foundation
F_4 and F_5 horizontal force perpendicular to the side plates of the post base acting with the lever arm $e_{F4/F5}$ above the foundation

Combined forces

$\sum F_{i,d} / R_{i,d} \leq 1$ forces F_2 and F_3 or F_4 and F_5 are forces with opposite direction. F_4 or F_5 , respectively, is able to act simultaneously with F_1 .

Safety principles and partial factors

The design value of the load-carrying capacity is the smaller value of all load-carrying capacities:

$$F_{Rd} = \min \left\{ \frac{k_{mod} * F_{Rk,H}}{\gamma_{M,H}} ; \frac{F_{Rk,S}}{\gamma_{Mi,S}} ; \frac{F_{Rk,B}}{\gamma_{Ri,B}} \right\}$$

$F_{Rk,H}$ timber failure or failure of the metal fasteners (EN 1995-1-1)
$F_{Rk,S}$ steel failure (EN 1993-1-1)
$F_{Rk,B}$ foundation failure (EN 1997-1)

Characteristic load-carrying capacities

		F_1 (Compression) [KN]			F_1 (Tension) [KN]			F_{23} [KN]			F_{45} [KN]		
Type	**Angle**	**Timber**	**Steel**		**Timber**	**Steel**		**Timber**	**Steel**		**Timber**	**Steel**	
S40_1	0	7,4	6,6	8,5	7,4	6,6	8,5	5,5	2,1	5,5	-	-	
	15	7,4	3,5	8,1	7,4	3,5	8,1	5,5	1,9	5	-	-	
	30	7,4	2,5	6,1	7,4	2,5	6,1	5,5	1,9	4,9	-	-	
	45	7,4	2,1	5,2	7,4	2,1	5,2	5,5	2,1	5,2	-	-	
	60	7,4	1,9	4,9	7,4	1,9	4,9	5,5	2,5	6,1	-	-	
S40_2	0	7,4	6,6	8,5	7,4	6,6	8,5	5,5	2,1	5,5	-	-	
	15	7,4	3,5	8,1	7,4	3,5	8,1	5,5	1,9	5	-	-	
	30	7,4	2,5	6,1	7,4	2,5	6,1	5,5	1,9	4,9	-	-	
	45	7,4	2,1	5,2	7,4	2,1	5,2	5,5	2,1	5,2	-	-	
	60	7,4	1,9	4,9	7,4	1,9	4,9	5,5	2,5	6,1	-	-	
		γ_m	$\gamma_{m,0}$	$\gamma_{m,2}$	γ_m	$\gamma_{m,0}$	$\gamma_{m,2}$	γ_m	$\gamma_{m,0}$	$\gamma_{m,2}$			

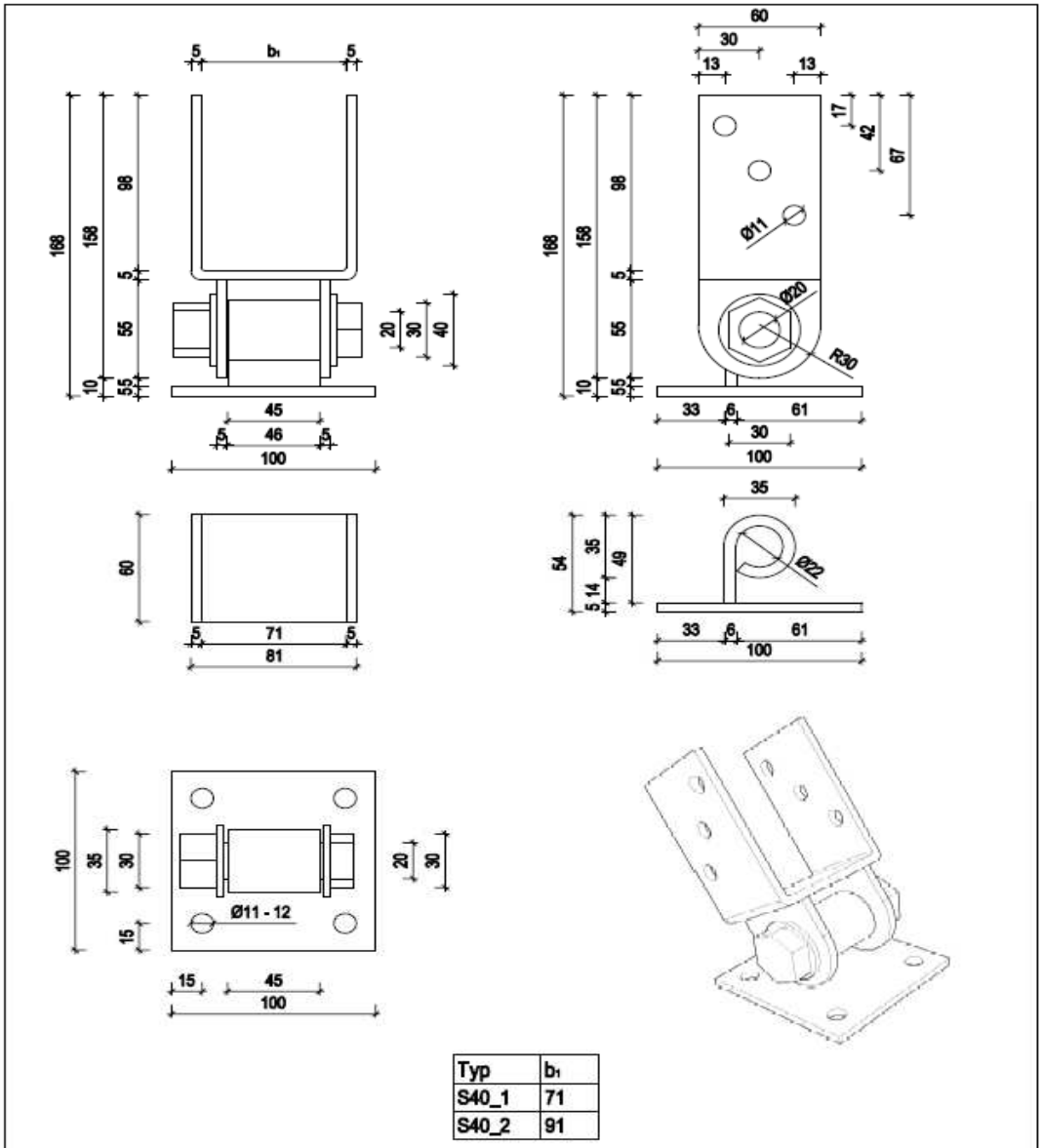

Typ	b_1
S40_1	71
S40_2	91

rothoblaas.com
Rotho Blaas Srl - GmbH
Via Dell'Adige 2/1 Etschweg
I-39040 Cortaccia - Kurtatsch (BZ)
Tel. +39 0471 81 84 00
Fax. +39 0471 81 84 84
www.rothoblaas.com
info@rothoblaas.com

Product:
Typ S40
Post base