WBR

REINFORCED ANGLE BRACKETS

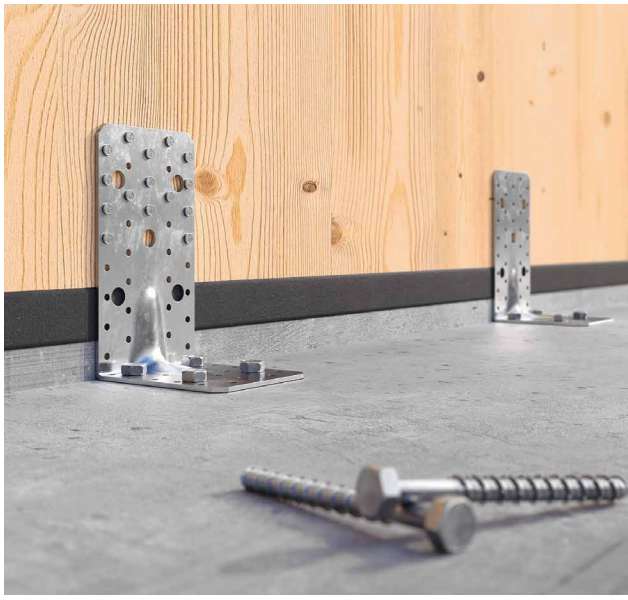

COMPLETE RANGE
Simple and effective angle brackets available in a full range of sizes to meet all structural and non-structural needs.

TIMBER AND CONCRETE
Due to the quantity and arrangement of the fastening holes, they can be used for both timber to timber, and timber to concrete connections.

DURABILITY
The 70, 90, and 100 mm models are also available in a stainless steel version made of A2 AISI 304.

CANADIAN DESIGN VALUES
USA, EU and more design values available online.



SERVICE CONDITION WBR	DRY
SERVICE CONDITION WBR A2	DRY WET

MATERIAL

DX51D Z275 — **WBR**: DX51D + Z275 carbon steel

A2 AISI 304 — **WBR A2**: A2 stainless steel (AISI304)

EXTERNAL LOADS

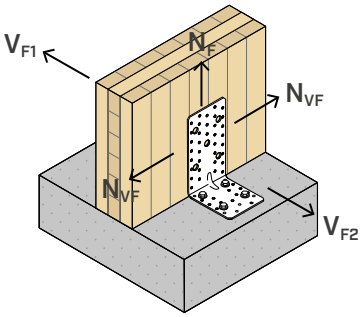



FIELD OF USE

Structural or non-structural applications for fastening any timber element.
Suitable for small structures and small carpentry connections.

Can be applied to:
- solid timber and glulam
- LVL
- other timber-based materials

CODES AND DIMENSIONS

WBR 70-90-100

DX51D Z275

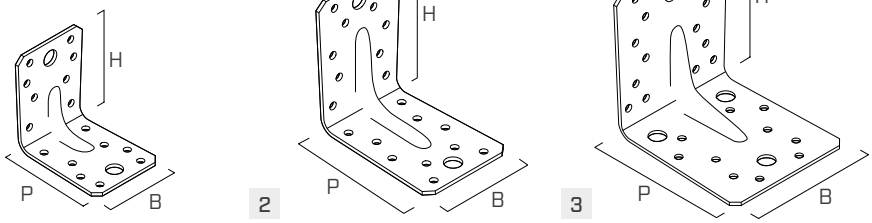

	CODE	B [mm]	P [mm]	H [mm]	s [mm]	*B [in]*	*P [in]*	*H [in]*	*s [in]*	n Ø5 *n Ø0.20* [pcs]	n Ø11 *n Ø0.44* [pcs]			pcs
1	**WBR07015**	55	70	70	1,5	*2 3/16*	*2 3/4*	*2 3/4*	*0.06*	16	2	●	●	100
2	**WBR09015**	65	90	90	1,5	*2 9/16*	*3 1/2*	*3 1/2*	*0.06*	20	2	●	●	100
3	**WBR10020**	90	105	105	2,0	*3 1/2*	*4 1/8*	*4 1/8*	*0.08*	24	4	●	●	50

WBR A2 70-90-100

A2 AISI 304

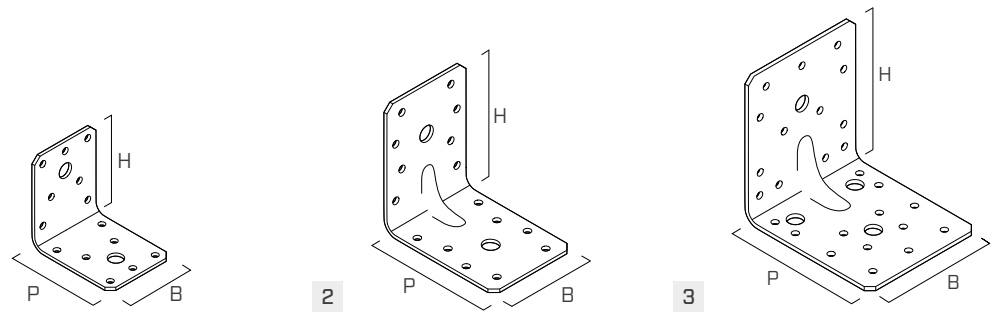

	CODE	B [mm]	P [mm]	H [mm]	s [mm]	*B [in]*	*P [in]*	*H [in]*	*s [in]*	n Ø5 *n Ø0.20* [pcs]	n Ø11 *n Ø0.44* [pcs]			pcs
1	**AI7055**	55	70	70	2,0	*2 3/16*	*2 3/4*	*2 3/4*	*0.08*	14	2	●	●	100
2	**AI9065**	65	90	90	2,5	*2 9/16*	*3 1/2*	*3 1/2*	*0.10*	16	2	●	●	100
3	**AI10090**	90	105	105	2,5	*3 1/2*	*4 1/8*	*4 1/8*	*0.10*	26	4	●	●	50

Not holding CE marking.

WBR 90110-170

DX51D Z275

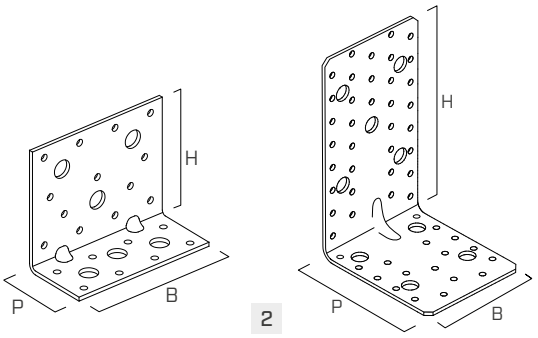

	CODE	B [mm]	P [mm]	H [mm]	s [mm]	*B [in]*	*P [in]*	*H [in]*	*s [in]*	n Ø5 *n Ø0.20* [pcs]	n Ø13 *n Ø0.52* [pcs]			pcs
1	**WBR90110**	110	50	90	3,0	*4 3/8*	*1 15/16*	*3 1/2*	*0.12*	21	6	●	●	50
2	**WBR170**	95	114	174	3,0	*3 3/4*	*4 1/2*	*6 7/8*	*0.12*	53	9	●	●	25

ADDITIONAL PRODUCTS - FASTENING

type	description		d [mm]	support
LBA	high bond nail		4	
LBS	round head screw	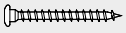	5	
SKR	screw-in anchor	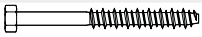	10-12	
VIN-FIX	vinyl ester chemical anchor	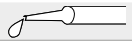	M10 - M12	

FASTENING PATTERNS

TIMBER-TO-TIMBER

WBR07015	WBR09015	WBR10020	WBR90110	WBR170
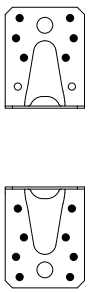	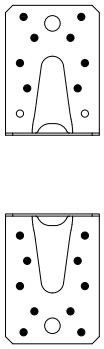	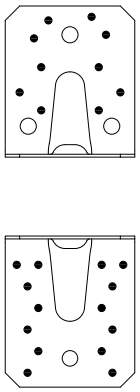	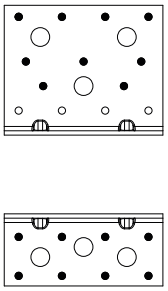	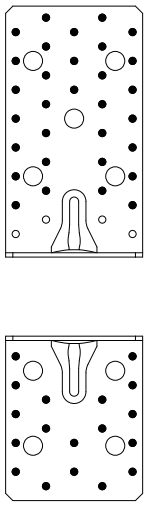
pattern 1	**pattern 1**	**pattern 1**	**pattern 1**	**pattern 1**

TIMBER-TO-CONCRETE

WBR07015	WBR09015	WBR10020	WBR90110	WBR170
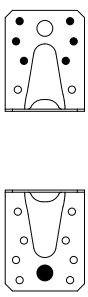	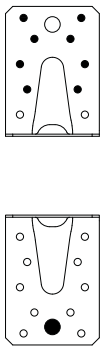	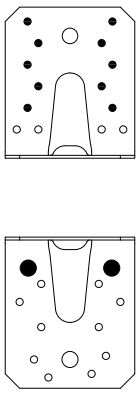	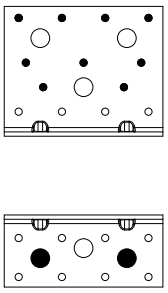	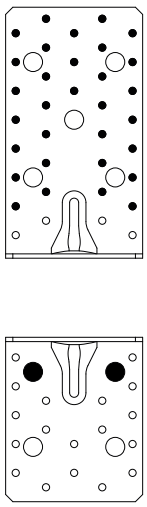
pattern 2	**pattern 2**	**pattern 2**	**pattern 2**	**pattern 2**

rothoblaas

STRUCTURAL VALUES | TIMBER-TO-TIMBER | N_F

WBR07015 | WBR09015 | WBR10020 | WBR90110 | WBR170

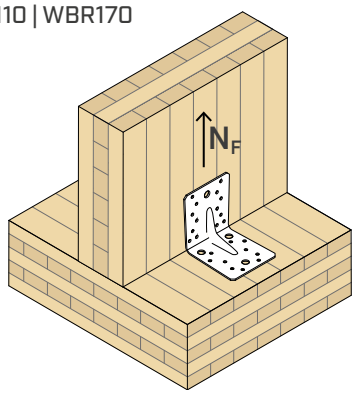

TIMBER STRENGTH

CODE	configuration on timber	fastening holes				TIMBER-STEEL N_r [1][2] factored lateral resistance (K_D=1.15)		
		type	Ø x L [mm]	n_V [pcs]	n_H [pcs]	E3 G = 0.35 [kN]	E1 and V2 G = 0.42 [kN]	E2 and V1 G = 0.49 [kN]
WBR07015	**pattern 1**	LBA LBS	Ø4 x 60 Ø5 x 60	6	8	**0,9** **3,7**	**1,0** **4,3**	**1,2** **4,9**
WBR09015	**pattern 1**	LBA LBS	Ø4 x 60 Ø5 x 60	8	10	**0,9** **3,8**	**1,1** **4,5**	**1,2** **5,0**
WBR10020	**pattern 1**	LBA LBS	Ø4 x 60 Ø5 x 60	10	14	**1,9** **7,8**	**2,1** **9,0**	**2,4** **10,2**
WBR90110	**pattern 1**	LBA	Ø4 x 60	9	8	**1,7**	**1,9**	**2,2**
WBR170	**pattern 1**	LBA	Ø5 x 60	31	18	**1,0**	**1,1**	**1,3**

STRUCTURAL VALUES | TIMBER-TO-TIMBER | N_{VF}

WBR07015 | WBR09015 | WBR10020 | WBR90110 | WBR170

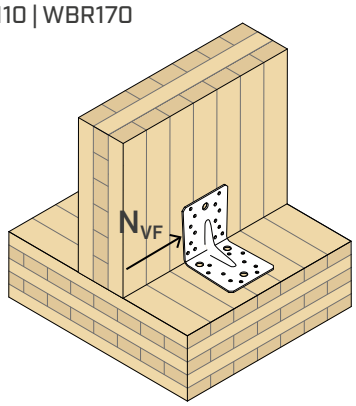

TIMBER STRENGTH

CODE	configuration on timber	fastening holes				TIMBER-STEEL N_r [1][2] factored lateral resistance (K_D=1.15)		
		type	Ø x L [mm]	n_V [pcs]	n_H [pcs]	E3 G = 0.35 [kN]	E1 and V2 G = 0.42 [kN]	E2 and V1 G = 0.49 [kN]
WBR07015	**pattern 1**	LBA LBS	Ø4 x 60 Ø5 x 60	6	8	**2,4** **3,6**	**2,6** **4,1**	**2,9** **4,5**
WBR09015	**pattern 1**	LBA LBS	Ø4 x 60 Ø5 x 60	8	10	**2,8** **4,4**	**3,1** **4,9**	**3,5** **5,4**
WBR10020	**pattern 1**	LBA LBS	Ø4 x 60 Ø5 x 60	10	14	**4,5** **7,5**	**5,0** **8,3**	**5,6** **9,2**
WBR90110	**pattern 1**	LBA	Ø4 x 60	9	8	**3,3**	**3,8**	**4,2**
WBR170	**pattern 1**	LBA	Ø4 x 60	31	18	**4,8**	**5,4**	**6,0**

GENERAL PRINCIPLES

For the GENERAL PRINCIPLES of calculation, see page 9.

STRUCTURAL VALUES | TIMBER-TO-TIMBER | V_{F1} | $V_{F1/2}$

WBR07015 | WBR09015 | WBR10020 | WBR90110 | WBR170

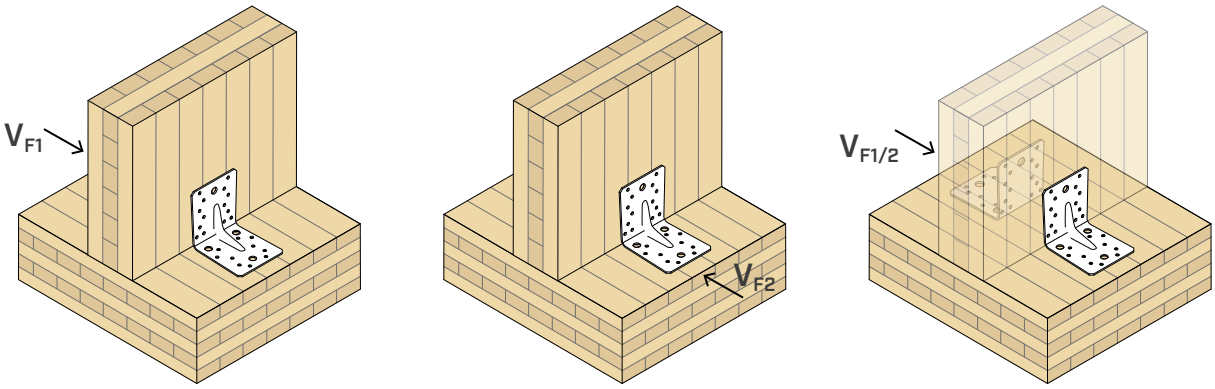

TIMBER STRENGTH

CODE	configuration on timber	fastening holes				V_{r1} factored resistance (K_D=1.15)			V_{r2} factored resistance	$V_{r1/2}$(*) factored resistance (K_D=1.15)		
		type	Ø x L	n_V	n_H	E3 G = 0.35	E1 and V2 G = 0.42	E2 and V1 G = 0.49		E3 G = 0.35	E1 and V2 G = 0.42	E2 and V1 G = 0.49
			[mm]	[pcs]	[pcs]	[kN]	[kN]	[kN]	[kN]	[kN]	[kN]	[kN]
WBR07015	**pattern 1**	LBA	Ø4 x 60	6	8	**4,6**	**5,4**	**6,0**	**0,4**	**5,0**	**5,8**	**6,5**
		LBS	Ø5 x 60			**4,8**	**5,7**	**6,5**	**0,4**	**5,3**	**6,2**	**6,9**
WBR09015	**pattern 1**	LBA	Ø4 x 60	8	10	**5,7**	**6,6**	**7,5**	**0,5**	**6,2**	**7,2**	**8,0**
		LBS	Ø5 x 60			**6,0**	**7,1**	**8,0**	**0,5**	**6,6**	**7,7**	**8,6**
WBR10020	**pattern 1**	LBA	Ø4 x 60	10	14	**9,0**	**10,7**	**12,1**	**1,4**	**10,4**	**12,1**	**13,5**
		LBS	Ø5 x 60			**9,5**	**11,3**	**12,8**	**1,4**	**10,9**	**12,7**	**14,2**
WBR90110	**pattern 1**	LBA	Ø4 x 60	9	8	**9,5**	**10,3**	**11,2**	**3,6**	**13,1**	**13,9**	**14,8**
WBR170	**pattern 1**	LBA	Ø4 x 60	31	18	**18,8**	**21,9**	**24,5**	**2,9**	**21,7**	**24,8**	**27,4**

(*) 2 angle brackets per joint.

NOTES

- The V_{F1}, V_{F2}, $V_{F1/2}$ values in the table are valid for the acting stress calculation eccentricity e=0 (timber elements prevented from rotating).

STRUCTURAL VALUES | TIMBER-TO-CONCRETE | N_F

WBR10020

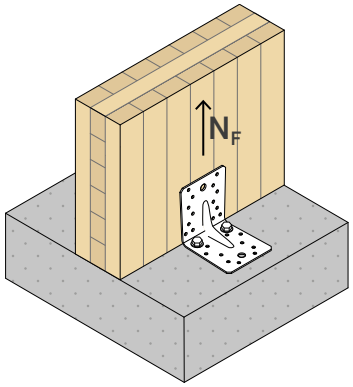

TIMBER STRENGTH

CODE	fastening holes Ø5			TIMBER-STEEL			
				N_r [(1)(2)] factored lateral resistance (K_D=1.15)			R_{steel}
	type	Ø x L [mm]	n_V [pcs]	E3 G = 0.35 [kN]	E1 and V2 G = 0.42 [kN]	E2 and V1 G = 0.49 [kN]	[kN]
WBR10020	LBA	Ø4 x 60	10	**11,8**	**12,9**	**14,0**	**8,6**
	LBS	Ø5 x 60	10	**13,7**	**15,3**	**16,8**	**8,6**

CONCRETE STRENGTH

Strength values of some of the possible fastening solutions.

configuration on concrete	fastening holes Ø11			$R_{concrete}$ [(3)]	$k_{t//}$ [(4)]
	type	Ø x L [mm]	n_H [pcs]	[kN]	[kN]
uncracked	VIN-FIX 5.8	M10 x 140	2	**12,8**	1,15
	SKR	M10 x 80		**13,9**	
cracked	VIN-FIX 5.8	M10 x 140		**7,1**	
	SKR	M10 x 80		**9,9**	

CHEMICAL ANCHORS INSTALLATION PARAMETERS

anchor type		d_0	h_{ef}	h_{nom}	h_1	h_{min}
	Ø x L	[mm]	[mm]	[mm]	[mm]	[mm]
VIN-FIX 5.8	M10 x 140	12	115	115	120	200
SKR	M10 x 80	8	56	70	85	150

INA precut threaded rod complete with nut and washer: see INA data sheet at www.rothoblaas.com

GENERAL PRINCIPLES

For the GENERAL PRINCIPLES of calculation, see page 9.

STRUCTURAL VALUES | TIMBER-TO-CONCRETE | N_{VF}

WBR10020

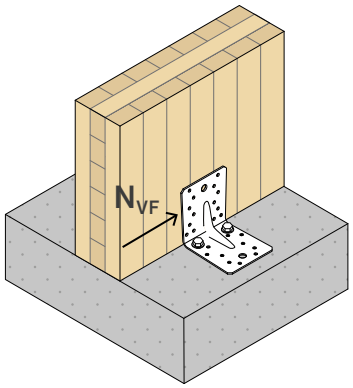

TIMBER STRENGTH

CODE	fastening holes Ø5			TIMBER-STEEL N_{Vr} [1][2] factored lateral resistance (K_D=1.15)		
	type	Ø x L [mm]	n_V [pcs]	E3 G = 0.35 [kN]	E1 and V2 G = 0.42 [kN]	E2 and V1 G = 0.49 [kN]
WBR10020	LBA	Ø4 x 60	10	**9,2**	**10,1**	**10,9**
	LBS	Ø5 x 60	10	**10,6**	**11,9**	**13,1**

CONCRETE STRENGTH

Strength values of some of the possible fastening solutions.

configuration on concrete	fastening holes Ø11			$R_{V\ concrete}$ [3]	e_y [5]
	type	Ø x L [mm]	n_H [pcs]	[kN]	[mm]
uncracked	VIN-FIX 5.8	M10 x 140	2	**32,9**	21,5
	SKR	M10 x 80		**12,4**	
cracked	VIN-FIX 5.8	M10 x 140		**18,1**	
	SKR	M10 x 80		**8,9**	

CHEMICAL ANCHORS INSTALLATION PARAMETERS

anchor type		d_0	h_{ef}	h_{nom}	h_1	h_{min}
	Ø x L	[mm]	[mm]	[mm]	[mm]	[mm]
VIN-FIX 5.8	M10 x 140	12	115	115	120	200
SKR	M10 x 80	8	56	70	85	150

INA precut threaded rod complete with nut and washer: see INA data sheet at www.rothoblaas.com

STRUCTURAL VALUES | TIMBER-TO-CONCRETE | N_{VF}

WBR90110 | WBR170

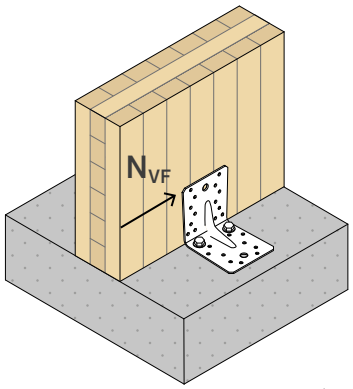

TIMBER STRENGTH

CODE	configuration on timber	fastening holes Ø5			fastening holes Ø11	TIMBER-STEEL N_{Vr} [1][2] factored lateral resistance (K_D=1.15)		
		type	Ø x L [mm]	n_V [pcs]	n_H [pcs]	E3 G = 0.35 [kN]	E1 and V2 G = 0.42 [kN]	E2 and V1 G = 0.49 [kN]
WBR90110	**pattern 2**	LBA	Ø4 x 60	9	2	**5,7**	**6,3**	**6,8**
WBR170	**pattern 2**	LBA	Ø4 x 60	31	2	**16,4**	**17,9**	**19,3**

[1]Timber-to-concrete characteristic values are calculated by distributing part of the moment given by eccentricity on the nails. Other static diagrams can be calculated by the designer.

STRUCTURAL VALUES | TIMBER-TO-CONCRETE | V_{F1} | V_{F2} | $V_{F1/2}$

WBR07015 | WBR09015 | WBR10020

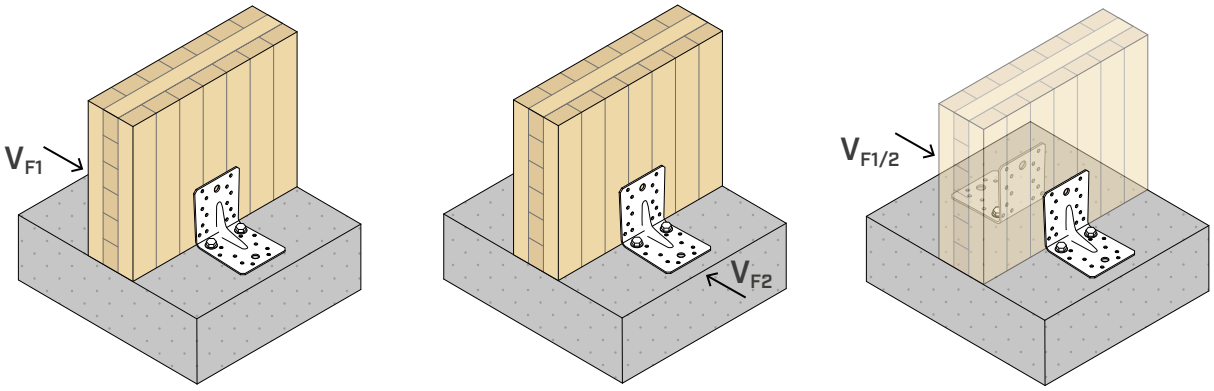

TIMBER STRENGTH

CODE	configuration on timber	fastening holes			V_{r1} factored resistance (K_D=1.15)			V_{r2} factored resistance	$V_{r1/2}$(*) factored resistance (K_D=1.15)		
		type	Ø x L	n_V	E3 G = 0.35	E1 and V2 G = 0.42	E2 and V1 G = 0.49		E3 G = 0.35	E1 and V2 G = 0.42	E2 and V1 G = 0.49
			[mm]	[pcs]	[kN]	[kN]	[kN]	[kN]	[kN]	[kN]	[kN]
WBR07015	**pattern 2**	LBA	Ø4 x 60	6	**4,6**	**5,4**	**6,0**	**0,4**	**5,0**	**5,8**	**6,5**
		LBS	Ø5 x 60		**4,8**	**5,7**	**6,5**	**0,4**	**5,3**	**6,2**	**6,9**
WBR09015	**pattern 2**	LBA	Ø4 x 60	8	**5,7**	**6,6**	**7,5**	**0,5**	**6,2**	**7,2**	**8,0**
		LBS	Ø5 x 60		**6,0**	**7,1**	**8,0**	**0,5**	**6,6**	**7,7**	**8,6**
WBR10020	**pattern 2**	LBA	Ø4 x 60	10	**9,0**	**10,7**	**12,1**	**1,4**	**10,4**	**12,1**	**13,5**
		LBS	Ø5 x 60		**9,5**	**11,3**	**12,8**	**1,4**	**10,9**	**12,7**	**14,2**

The V_{F1}, V_{F2}, $V_{F1/2}$ values in the table are valid for the acting stress calculation eccentricity e=0 (timber elements prevented from rotating).
(*) 2 angle brackets per joint.

GENERAL PRINCIPLES

- Design values can be obtained from values in the table as follows:

  TIMBER-TO-TIMBER INSTALLATION (under tension force N_F):

  $$R_{design} = N_r$$

  TIMBER-TO-CONCRETE INSTALLATION (under tension force N_F):

  $$R_{design} = min \begin{cases} N_r \\ R_{concrete} \end{cases}$$

  TIMBER-TO-TIMBER INSTALLATION (under shear force N_{VF}):

  $$R_{design} = N_{Vr}$$

  TIMBER-TO-CONCRETE INSTALLATION (under shear force N_{VF}):

  $$R_{design} = min \begin{cases} N_{Vr} \\ R_{V\,concrete} \end{cases}$$

- The resistance values of LBA nails are determined according to section 12.9 (nails and spikes).
- The specified bending yield strength for LBA with a 4 mm diameter is fyb = 645 MPa and for LBS with a 5 mm diameter is fyb = 1075 MPa.
- G is the mean relative density according to Table A.12 in CSA O86:2024. Typical wood species considered include Northern species (G = 0.35), Spruce-Pine-Fir (G = 0.42), and Douglas Fir (G = 0.49).
- The design values of timber are determined for the combined timber-side and steel-side failure.
- Dimensioning and verification of timber and concrete elements must be carried out separately. Verify that there are no brittle failures before reaching the connection strength.
- Structural elements in timber, to which the connection devices are fastened, must be prevented from rotating.
- The calculation of the concrete anchors is performed following CSA A23.3:2024, Annex D.
- The characteristic bond stress of adhesive anchors in cracked and uncracked concrete is taken from European Technical Assessment test reports.
- The calculation process uses C25/30 concrete without considering edge effects.
- Fastening elements to concrete using anchors not listed in the table must be verified according to the load applied to the anchors.
- The strength values are valid for the calculation hypotheses defined in the table; for boundary conditions different from the ones in the table (e.g. minimum distances from the edge), the anchors-to-concrete must be recalculated according to the design requirements.
- For proper installation of screws, it is recommended to refer to the "TIMBER SCREWS AND DECK FASTENING" catalogue.
- The product ETAs for the anchors used in the concrete-side strength calculation are indicated below:
- The product ETAs for the anchors used in the concrete-side strength calculation are indicated below:
  - VIN-FIX chemical anchor according to ETA-20/0363;
  - SKR screw-in anchor according to ETA-24/0024.

NOTES

(1) Values for factored lateral resistance for self-taping screws are determined following the guidelines in Section 12.12 in CSA-O86 2024. Short term load duration factor (K_D = 1.15), dry service condition factor (K_{SF} = 1.0), and treatment factor (K_T = 1.0) are assumed.

(2) Adjustment factor for connections (J_x) is assumed to be equal to 0.9 for CLT connections.

(3) The characteristic bond stress of adhesive anchors in cracked and uncracked concrete is based on ETA certifications for VIN-FIX chemical anchors.

(4) The concrete resistance values in the table are determined taking into acount the contribution of $k_{t//}$ coefficient in the calculation.

(5) The concrete resistance values in the table are calculated considering the eccentricity (e_y) induced by the applied force.